Assembly Instructions

KINGYES
THINGS GO BETTER WITH US

Multifunction adirondack chair

A041-024-001

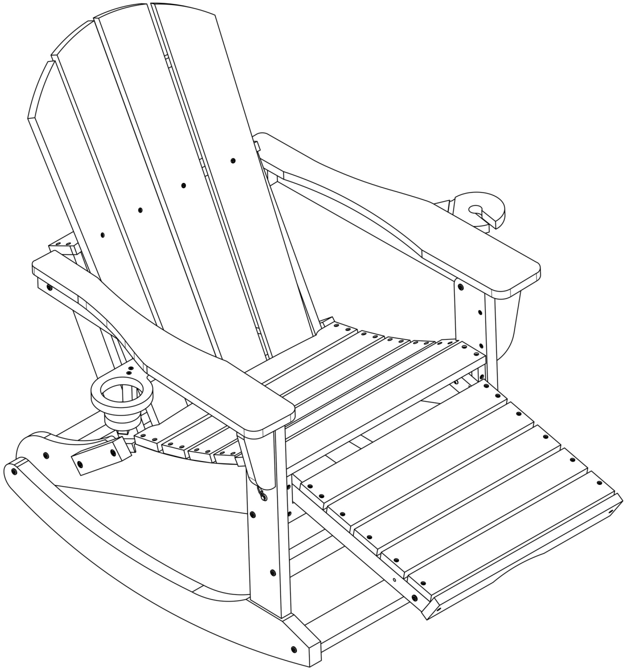

Important - Please read these instructions fully before starting assembly

HASSLE-FREE WARRANTY

Kingyes stand behind the quality of our products.
For full warranty policy, email: **info@kingyesoutdoor.com**

Safety & Care Advice

If you need help or have damaged or missing parts, please email: **info@kingyesoutdoor.com**

Important - Please read these instructions fully before starting assembly

Check you have all the components and tools listed on the pages 3.

Remove all fittings from the plastic bags and separate them into their groups.

Keep children and animals away from the work area, small parts may cause choking if swallowed.

Make sure you have enough space to layout the parts before starting.

Assemble on a soft level surface to avoid damaging the unit or your floor.

Do not stand or put weight on the product, this could cause damage.

Assemble the item as close to its final position (in the same area) as possible.

Do not place furniture directly in front of radiators, fires or any other source of heat.

350 LBS CAPACITY

1 PERSON ASSEMBLY

AROUND 15 MIN. ASSEMBLY

The assembly will be easier with two people while one person could also do the job.

General care & maintenance

Using damp cloth and mild detergent for routine maintenance, do not use blench or abrasive cleaners.

From time to time check that there are no loose screws on this unit.

Clean & Sanitize Tips

Use this method for a quick clean-up here and there throughout the season — adding in the bleach solution to easily sanitize and eliminate any stubborn stains or dirt build-up from the winter months.

- Mix mild dish soap and warm water in a bucket.
- Use a clean cloth to wipe the soapy mixture onto the surfaces of your furniture, cleaning off any dirt.
- For extra cleaning power or to sanitize, mix 1/3 bleach and 2/3 water.
- Apply bleach mixture to furniture with a clean cloth and allow it to sit on the lumber for a few minutes (this will not affect the color).
- Loosen any dirt and debris that may catch in the surface grooves of the lumber by scrubbing the bleach mixture with a soft-bristle brush.
- Rinse thoroughly using a garden hose with a spray nozzle.

Components

If you need help or have damaged or missing parts, please email: **info@kingyesoutdoor.com**

Please check you have all the components listed below.

Note: The illustration of the chair shows the exact position of each part. Check when assembling.

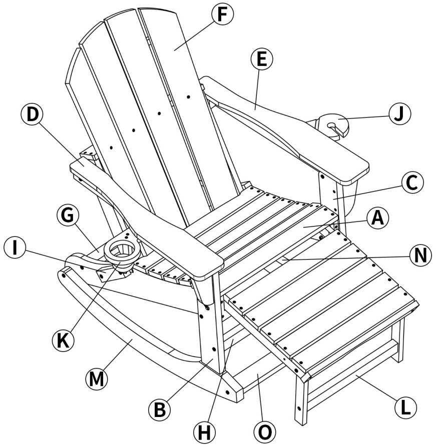

#		Description	Qty.
A		**Seat Frame**	1
B		**Right Leg**	1
C		**Left Leg**	1
D		**Right Arm**	1
E		**Left Arm**	1
F		**Backrest**	1
G		**Back Stretcher**	1
H		**Front Stretcher**	1
I		**Braces**	2
J		**Left Cup Holder**	1
K		**Right Cup Holder**	1
L	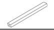	**Foot Support**	1
M		**Right Runner**	1
N	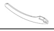	**Left Runner**	1
O	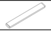	**Runner Stretcher**	1

Hardware & Tools

Note: The quantities below are the correct amount to complete the assembly. In some cases more fittings may be supplied than required.

① x 2
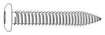
M5 x 50MM Screws

② x 6

M6 x 40MM Bolts

③ x 2

M6 x 50MM Bolts

④ x 6

M6 x 60MM Bolts

⑤ x 2
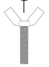
M6 x 30MM Bolts

⑥ x 2

M6 x 80MM Bolts

⑦ x 2
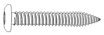
M6 x 60MM Screws

⑧ x 12

Washer

⑨ x 10

Nut

Hex Key(Included)

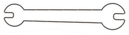
Wrench(Included)

Assembly Instructions

If you need help or have damaged or missing parts, please email: **info@kingyesoutdoor.com**

⚠ Caution: Please do not over-tighten bolts and screws during assembly.

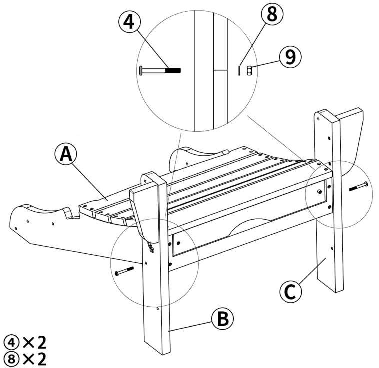

④×2
⑧×2
⑨×2

STEP 1

●Attach "Chair Legs (B/C)" to "Seat Frame (A)" - Using "④M6 x 60MM Bolts" with "⑧Washer" and "⑨ Nut" , tighten with hex key and wrench.

STEP 2

●Attach "Front Stretcher (H)" to "Chair Legs (B/C)" - Using "②M6 x 40MM Bolts", tighten with hex key.

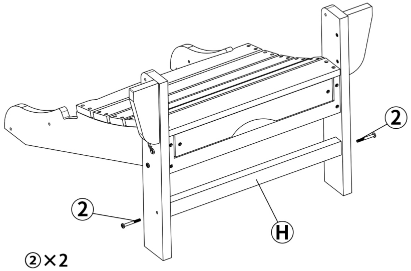

②×2

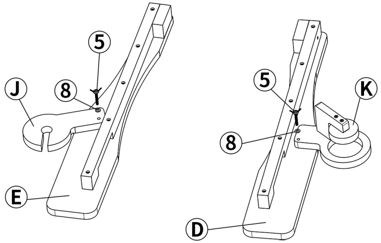

⑤×2
⑧×2

STEP 3

●Attach "Right Cup Holder (K)" to "Right Arm (D)" - Using "⑤M6 x 30MM Bolts" and "⑧Washers" ,tighten with hand.

●Attach "Left Cup Holder (J)" to "Left Arm (E)" - Using "⑤M6 x 30MM Bolts" and "⑧Washers" ,tighten with hand.

⚠ Caution: Please do not over-tighten bolts and screws during assembly.

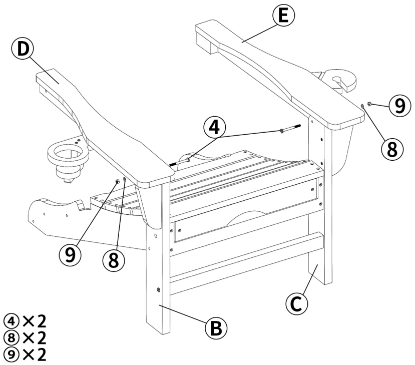

STEP 4

- Attach "Chair Arms (D/E)" to "Chair Legs (B/C)" - Using "④M6 x 60MM Bolts" with "⑧Washer" and "⑨ Nut" , tighten with hex key and wrench.

STEP 5

- Attach "Chair Arm (D/E)" to "Backrest (F)" - Using "⑥M6 x 80MM Bolts" with "⑧Washer" and "⑨Nut" , tighten with hex key.

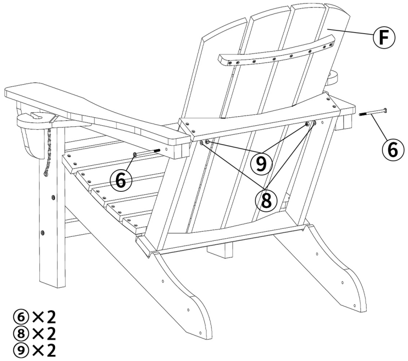

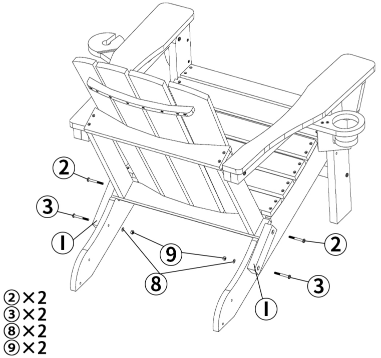

STEP 6

- Attach "Backrest (F)" to "Seat Frame (A)" with "Brace (I)" - Using "③M6 x 50MM Bolts" with "⑧ Washer" and "⑨Nut" in the back legs, and using "② M6 x 40MM Bolts" on the backrest frame, tighten with hex key and wrench.

⚠ Caution: Please do not over-tighten bolts and screws during assembly.

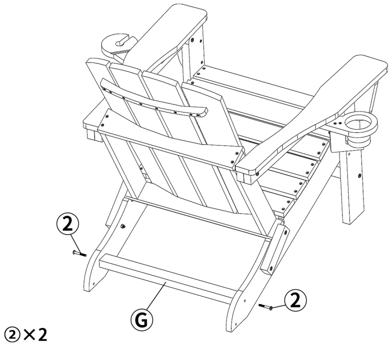

STEP 7

- Attach "Back Stretcher (G)" to "Seat Frame (A)" Using "②M6 x 40MM Bolts", tighten with hex key.

STEP 8

- Attach "Foot Support (L)" to the footrest of "Seat Frame (A)" - Using "①M5 x 50MM Screws", tighten with hex key.

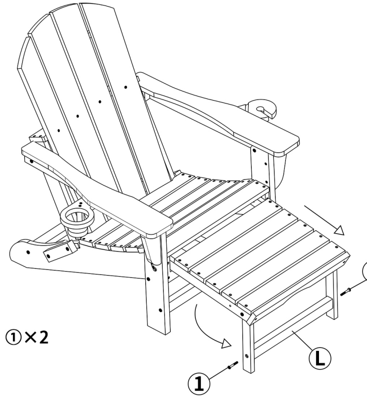

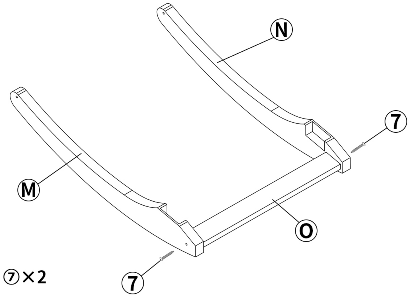

STEP 9

- Attach“Runner Stretcher (O)" to“Runners(M/N)”- Using“⑦M6 x 60MM Screws"， tighten with hex k

Assembly Instructions

⚠ Caution: Please do not over-tighten bolts and screws during assembly.

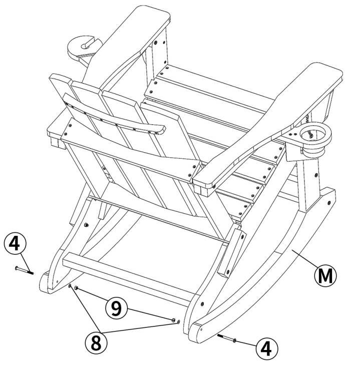

④×2
⑧×2
⑨×2

STEP 10

- To use it as a rocking chair, just attach "Runners (M/N)" to "Seat frame(A)"- Using"④M6 x 60MM Bolts with "⑧Washer" and "⑨Nut", tighten with hex key and wrench.
- Then attach the front legs to the notch of the runners.

Folding Chair

This Adirondack chair can be easily folded flat by pulling out the "Plug" inserted in the chair legs.

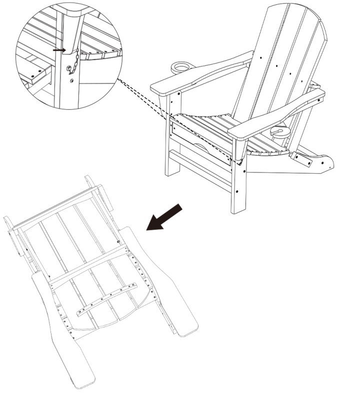

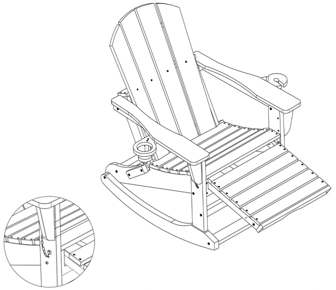

To avoid damage, please keep the plugs inserted when the chair is in use.

Mode Switching

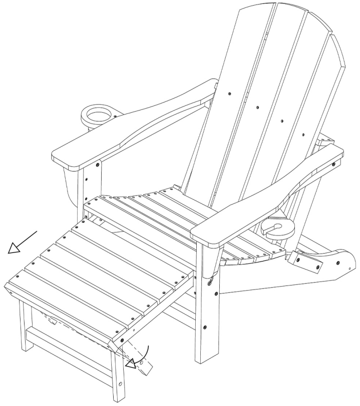

Adirondack Chair Mode

When using it as a practical Adirondack Chair ,the pull-out footrest provides a withdrawable ottoman, and the cupholders allow you to place your favourite drinks.

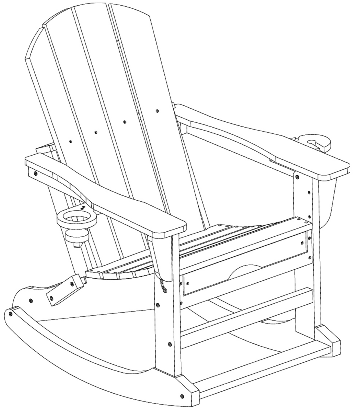

Rocking Chair Mode

Attach the gently slopped runner to the chair's legs, and you can get an Adirondack-style rocking chair that will add a soothing rhythm to your leisure summertime.